Linde Material Handling

Pallet Stacker

L06-L16 AC

Capacity 0.6 t – 1.6 t | Series 1171

Powerful and Agile

→ Long tiller and precise power steering for optimum handling and maneuverability
→ ISO standard forks for handling all types of pallets
→ Ergonomically shaped handle with all-round design for hand protection
→ Long, low-mounted tiller for sufficient safety distance to the chassis
→ Automatic speed reduction in curves for anti-tip protection and maximum driving safety

TECHNICAL DATA (According to VDI 2198)

Characteristics	1.1	Manufacturer		Linde	Linde	Linde	Linde
	1.2	**Model**		L06AC	L10AC	L12AC	L16AC
	1.2.a	Series		1171-01	1171-01	1171-01	1171-01
	1.3.	Power unit		Battery	Battery	Battery	Battery
	1.4	Operation		Pedestrian	Pedestrian	Pedestrian	Pedestrian
	1.5	Load capacity/Load	Q (t)	0.6	1.0	1.2	1.6
	1.6	Load centre distance	c (mm)	500	500	500	500
	1.8	Axle centre to fork face	x (mm)	107	107	107	107
	1.9	Wheelbase	y (mm)	914	1264	1264	1626
Weights	2.1	Service weight	(kg)	1725	1861	1885	2085
	2.2	Axle load with load, front/rear	(kg)	552/1773	619/2242	524/2561	698/2987
	2.3	Axle load without load, front/rear	(kg)	950/775	1099/762	1100/785	1295/790
Wheels/Tyres	3.1	Tyres rubber, SE, pneumatic, polyurethane		Polyurethane wet grip	Polyurethane wet grip	Polyurethane wet grip	Polyurethane wet grip
	3.2	Tyre size, front		Ø 230 × 100	Ø 230 × 100	Ø 230 × 100	Ø 230 × 100
	3.3	Tyre size, rear		Ø 85 × 105	Ø 85 × 105	Ø 85 × 105	Ø 85 × 105
	3.5	Wheels, number front/rear (x = driven)		1x/4	1x/4	1x/4	1x/4
	3.6	Track width, front	b10 (mm)	-	-	-	-
	3.7	Track width, rear	b11 (mm)	500	500	500	500
Dimensions	4.1	Mast/fork carriage tilt, forward/backward	a/b (°)		1.0/6.0	1.0/6.0	1.0/6.0
	4.2	Height of mast, lowered	h1 (mm)	1515	1515	1515	1515
	4.3	Free lift	h2 (mm)	150	150	150	150
	4.4	Lift	h3 (mm)	1924	1924	1924	1844
	4.5	Height of mast, extended	h4 (mm)	2485	2485	2485	2405
	4.9	Height of tiller arm in operating position, min/max	h14 (mm)	857/1222	857/1222	857/1222	857/1222
	4.15	Height, lowered	h13 (mm)	67	67	67	67
	4.19	Overall length	l1 (mm)	2461	2808	2808	3172
	4.20	Length to fork face	l2 (mm)	1311	1658	1658	2022
	4.21	Overall width	b1/b2 (mm)	790/890	790/890	790/890	790/890
	4.22	Fork dimensions DIN ISO 2331	s/e/l (mm)	43 × 100 × 1150	43 × 100 × 1150	43 × 100 × 1150	43 × 100 × 1150
	4.23	Fork carriage to ISO 2328, class/type A, B		2B	2B	2B	2B
	4.24	Width of fork carriage	b3 (mm)	1000	1000	1000	1000
	4.25	Fork spread	b5 (mm)	225/926	225/926	225/926	225/926
	4.31	Ground clearance, below mast	m1 (mm)	30	30	30	30
	4.32	Ground clearance, centre of wheelbase	m2 (mm)	2783 [1]	3133 [1]	3133 [1]	3495 [1]
	4.34.1	Aisle width for pallets 1000 × 1200 crossways	Ast (mm)	2891 [1]	3241 [1]	3241 [1]	3603 [1]
	4.34.2	Aisle width with pallet 800 × 1200 along forks	Ast (mm)	2891	3241	3241	3603
	4.35	Turning radius	Wa (mm)	1324	1674	1674	2036
Performance	5.1	Travel speed, with/without load	(km/h)	5/6	5/6	5/6	5/6
	5.2	Lifting speed, with/without load	(m/s)	-	0.15/0.3	0.15/0.3	0.15/0.3
	5.3	Lowering speed, with/without load	(m/s)	-	0.45/0.35	0.45/0.35	0.45/0.35
	5.10	Service brake		Electro-magnetic	Electro-magnetic	Electro-magnetic	Electro-magnetic
Drive	6.1	Drive motor rating S2 60 min	(kW)	2.3	2.3	2.3	2.3
	6.2	Lift motor rating at S3 15 %	(kW)	2.2	3.2	3.2	3.2
	6.3	Battery according to DIN 43531/35/36 A, B, C, no		43 535 B/3 PzS	43 535 B/3 PzS	43 535 B/3 PzS	43 535 B/4 PzS
	6.4	Battery voltage/rated capacity (5 h)	(V/Ah)	24/345/375	24/345/375	24/345/375	24/460/500
	6.5	Battery weight (± 5 %)	(kg)	287	287	287	365
	6.6	Power consumption according to VDI cycle	(kWh/h)	0.72	1.19	1.19	1.45
	6.7	Turnover output	(t/h)	26.4	50.4	50.4	67.0
	6.8	Energy consumption at turnover output	(kWh/h)	1.27	1.66	1.66	1.89
Others	8.1	Type of drive unit		LAC	LAC	LAC	LAC
	10.7	Sound pressure level LpAZ (at the driver's seat)	(dB(A))	63	61	61	61

1) Including a 200 mm (min.) operating aisle clearance.

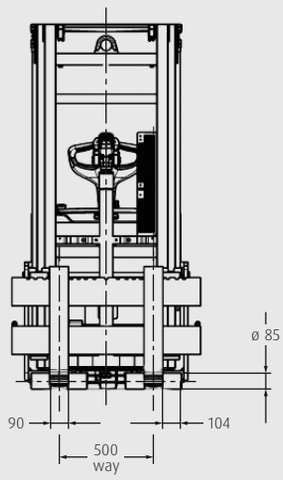
ø 85
90
104
500
way

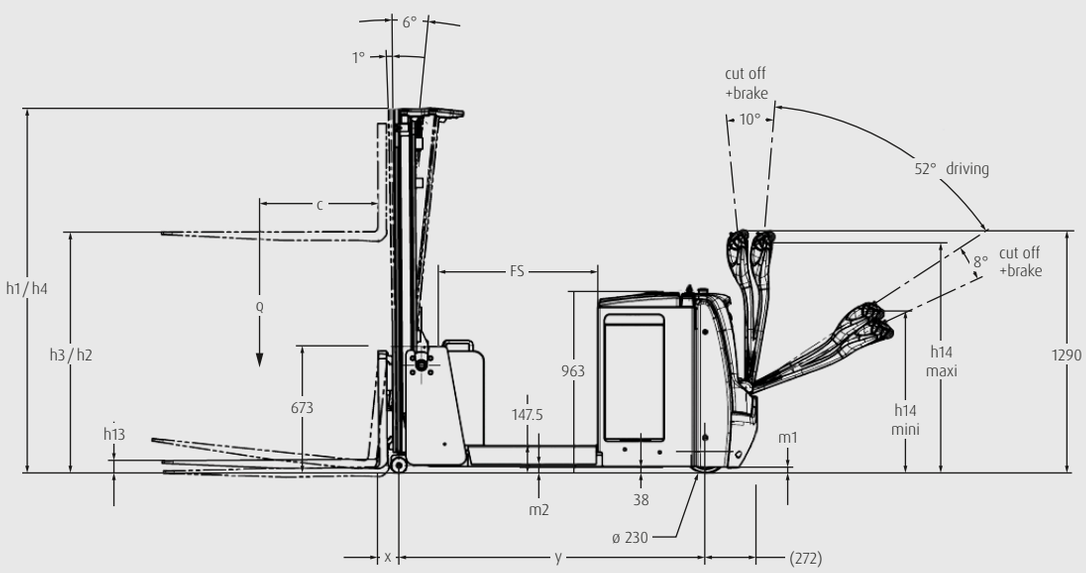
6°
1°
cut off
+brake
10°
52° driving
c
FS
8°
cut off
+brake
h1 / h4
Q
h3 / h2
963
h14
maxi
1290
673
147.5
h14
mini
h13
m1
m2
38
ø 230
x
y
(272)

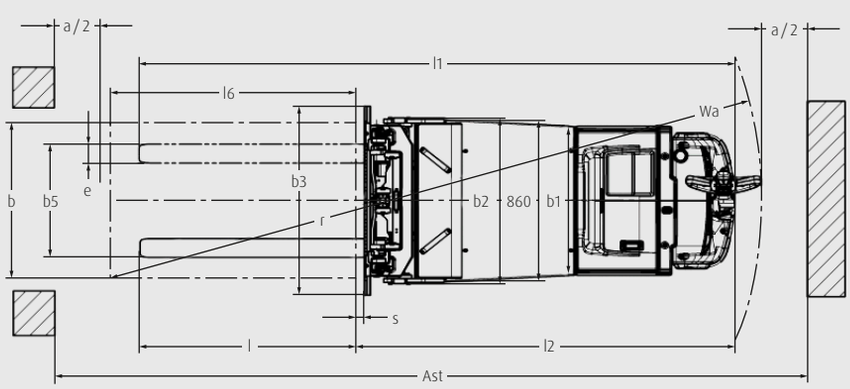
a / 2
a / 2
l1
l6
Wa
b
b5
e
b3
r
b2
860
b1
s
l
l2
Ast

MAST TABLES

STANDARD MAST (in mm)

Lift	h3: 1924	h3: 2424	h3: 2924	h3: 3324	h3: 3824
Height measurements	h1: 1440 h2: 879 h3: 1924 h4: 2485	h1: 1690 h2: 1129 h3: 2424 h4: 2985	h1: 1940 h2: 1379 h3: 2924 h4: 3485	h1: 2140 h2: 1579 h3: 3324 h4: 3885	h1: 2390 h2: 1829 h3: 3824 h4: 4385
Model					
L06AC	○	○	○	○	–
L10AC	○	○	○	○	○
L12AC	○	○	○	○	○
L16AC	–	–	–	–	–

Lift	h3: 4224	h3: 1844	h3: 2344	h3: 2844
Height measurements	h1: 2590 h2: 2029 h3: 4224 h4: 4785	h1: 1440 h2: 879 h3: 1844 h4: 2405	h1: 1690 h2: 1129 h3: 2344 h4: 2905	h1: 1940 h2: 1379 h3: 2844 h4: 3405
Model				
L06AC	–	–	–	–
L10AC	–	–	–	–
L12AC	○	–	–	–
L16AC	–	○	○	○

DUPLEX MAST (in mm)

Lift	h3: 3244	h3: 3744	h3: 4144
Height measurements	h1: 2140 h2: 1579 h3: 3244 h4: 3805	h1: 2390 h2: 1829 h3: 3744 h4: 4305	h1: 2590 h2: 2029 h3: 4144 h4: 4705
Model			
L06AC	–	–	–
L10AC	–	–	–
L12AC	–	–	–
L16AC	○	○	○

TRIPLEX MAST (in mm)

Lift	h3: 3516	h3: 4266
Height measurements	h1: 1690 h2: 1129 h3: 3516 h4: 4077	h1: 1940 h2: 1379 h3: 4266 h4: 4827
Model		
L06AC	○	–
L10AC	○	–
L12AC	○	○
L16AC	○	○

○ Optional equipment – Not available

h1: Height of mast, lowered **h2:** Free lift **h3:** Lift **h4:** Height of mast, extended

STANDARD AND OPTIONAL EQUIPMENT

	Model / Equipment	L06 AC	L10 AC	L12 AC	L16 AC
Safety	Automatic speed reduction when cornering	●	●	●	●
	Low mounted tiller	●	●	●	●
	Key switch or Log in PIN code	●	●	●	●
Service	CAN bus technology	●	●	●	●
Digitalisation	Linde Connected Solutions:	○	○	○	○
	ac: access control (PIN or RFID Dual),	○	○	○	○
	an: usage analysis and dt: crash detection	○	○	○	○
	Data transfer online	○	○	○	○
	Data transfer WIFI	○	○	○	○
	Bluetooth USB Stick	○	○	○	○
Operation / Load Handling	Soft landing on forks	○	○	○	○
	Ultra Fast Lifting	○	○	○	○
	Load backrest 1000 mm	○	○	○	○
Enviroment	Cold store protection to -35°C	○	○	○	○
Workplace	Multifunction coloured display hour meter, maintenance indication, battery discharge indicator and internal fault code indication	●	●	●	●
	Spacious storage compartments	●	●	●	●
	Accessory support	○	○	○	○
	Support data terminal incl. power supply cable 24 V	○	○	○	○
	Support clipboard DIN A4	○	○	○	○
	Support for scanner	○	○	○	○
Mast	Standard mast	○	○	○	○
	Duplex mast	○	○	○	○
	Triplex mast	○	○	○	○
	Tilting mast (+1° / -6°) (on the L10 / 12 / 16 AC)	–	○	○	○
	Mast protection: polycarbonate	●	●	●	●
	Mast protection: mesh	○	○	○	○
Attachement / Forks	Fork carriage: 800 mm ISO2B	●	●	●	●
	Fork carriage: 900 mm ISO2B	–	○	○	○
	Fork carriage: 1000 mm ISO2B	–	○	○	○
	Forks 1000 / 80 x 40 mm	●	●	●	–
	Forks 1100 / 80 x 40 mm	○	○	○	–
	Forks 1200 / 80 x 40 mm	○	○	○	–
	Forks 1000 / 100 x 45 mm	–	–	–	●
	Forks 1100 / 100 x 45 mm	–	–	–	○
	Forks 1200 / 100 x 45 mm	–	–	–	○
Axles and Tyres	Polyurethane wet grip drive wheel	●	●	●	●
	Polyurethane load wheels	●	●	●	●
Drive and Brake-System	Power assisted steering	●	●	●	●
	2.3 kW AC motor (maintenance free)	●	●	●	●
	Electromagnetic Braking systems	●	●	●	●
	Battery compartment, vertical change 3 PzS (345 Ah / 375 Ah)	–	●	●	●
	Battery compartment, vertical change 4 PzS (460 Ah / 500 Ah)	–	○	○	○
	Battery compartment, side change 3 PzS (345 Ah / 375 Ah), incl. ergonomic lever and metal rollers	●	○	○	○
	Battery compartment, side change 4 PzS (460 Ah / 500 Ah), incl. ergonomic lever and metal rollers	–	○	○	○
	Battery compartment, Li-ION battery (205 AH / 410 AH), incl. side plug for opportunity charging	–	○	○	○
	Li-ION 24V-Charger	–	○	○	○

● Standard equipment ○ Optional equipment – Not available

CHARACTERISTICS

Low mounted tiller ensures large safety clearance between operator and chassis

Safety

→ Long, low-mounted tiller ensures sufficient safety clearance between driver and chassis
→ All-round design of ergonomic handles protects the operator's hands
→ Automatic speed adjustment in curves reduces the risk of overturning
→ Automatic braking stops the truck as soon as the operator releases the controls

All controls on ergonomic tiller can be easily operated by either hand

Ergonomics

→ Operating controls on the console of the tiller head simplify handling
→ Spacious storage compartment enables the storage of important work equipment
→ Long tiller makes maneuvering easier, even in confined spaces
→ Lift mast control via handle ensures effortless load handling

Fitted with ISO standard forks, the trucks can handle all types of pallets

Handling

→ ISO standard forks accommodate all types of pallets
→ High maneuverability simplifies working in confined spaces
→ Compact, maintenance-free 2.3 kW AC drive ensures optimum performance
→ High residual load capacity enables sovereign material handling

All truck components are easily and freely accessible

Service

→ Digital multifunctional display shows all important truck parameters
→ CAN bus connection enables the service technician to read out and analyze truck data with a laptop
→ Free access to relevant truck components aids maintenance
→ Maintenance-free AC drive ensures short downtimes

Presented by:

Subject to modification in the interest of progress. Illustrations and technical details could include options and not binding for actual constructions. All dimensions subject to usual tolerances.

Linde Material Handling

Linde Material Handling GmbH
Carl-von-Linde-Platz | 63743 Aschaffenburg | Germany
Phone + 49 6021 99 0 | Fax + 49 6021 99 1570
www.linde-mh.com | info@linde-mh.com

DS_L06 AC_L16 AC_1171_en_B_0622